Professionall

Solutii profesionale pentru echipamente profesionale

GAS COMPONENTS

ELECTRIC COMPONENTS

WATER TECHNOLOGY

MECHANICAL COMPONENTS

TOOLS

Spare parts suitable for

HUALING

heating elements

heating elements for fryers

2 hole fixing

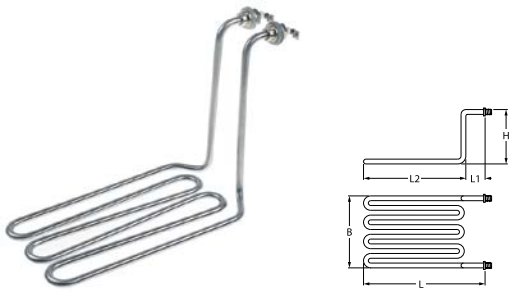

1

No.	417598	**Ref. No.**	1.07.HDF4140403 GDF1104-013 GDF1104-13 GDF2124-013
description	heating element 2500W 230V heating circuits 1 L 290mm W 130mm H 200mm L1 40mm L2 230mm tube ø 8mm		

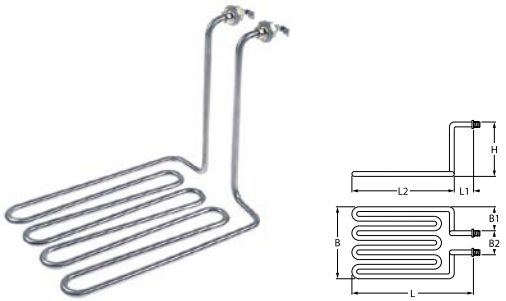

1

No.	417599	**Ref. No.**	1.07.HDF8141903 GDF1108-012 GDF2128-012 HDF1108-013 HDF1108-13 HDF2128-013
description	heating element 3250W 230V heating circuits 1 thread M12x1.25 L 280mm W 190mm H 210mm L1 35mm L2 245mm W1 120mm W2 70mm tube ø 8mm connection M4		

thermostats

control and safety thermostats

various

control thermostats

1

No.	390968	**Ref. No.**	1.06.1851713 GDF1104-018 GDF1108-008 GDF2124-018 GDF2128-008 HDF1108-018 HDF1108-18 HDF2128-018
description	thermostatcontroler t.max. 185°C temperature range°C 2-pole 1NO 16A probe ø 6mm probe L 77mm capillary pipe 1500mm capillary pipe isolatedmm gland nut shaft ø 6x4.6mm shaft L 25mm shaft position upper rotation 270° probe material SS		

safety thermostats

1

No.	390970	**Ref. No.**	1.06.230171301 GDF1104-005 GDF1104-5 GDF1108-023 GDF2124-005 GDF2128-023 HDF1108-005 HDF2128-005
description	safety thermostat switch-off temp. 230°C 2-pole 1NC 16A probe ø 5mm probe L 48mm capillary pipe 440mm capillary pipe isolated 150mm gland nut probe 250V model WQS-230		

MAG-PRO

switches and momentary switches

push/momentary push switches

ø22mm

1

No.	347819	**Ref. No.**	1.05.053512HY57
description	momentary push switch mounting ø 22mm red/green 1NO/1NC/ indicator light 240V 10A ON-OFF connection screw ambient temperature max. 85°C protection IP65		
accessories for	347819		

No.	358007	Ref. No.	—
protective cover external size 33x53mm internal size 30x50mm H 23mm			

position switches

METRO

1

No.	348088	**Ref. No.**	1.05.035011HDFMS116 GDF1104-006 GDF1104-6 GDF1108-022 GDF2124-006 GDF2128-022 HDF1108-006 HDF2128-006
description	microswitch 1NO 250V 16A L 41mm W 12mm H 44mm actuating force: 250g		

magnetic switches

accessories

magnets

1

No.	348242	**Ref. No.**	1.03.00010018
description	magnet ø 19.5mm H 2.8mm		

magnetic holders

1

No.	348241	**Ref. No.**	1.03.00010057
description	magnet holder with magnet internal size 19.5mm H 14mm thread M12 ø 24mm		

lamps

indicator lights

indicator lights (complete)

ø14mm

with screw socket

1

No.	360622	**Ref. No.**	1.03.00020013 GDF1104-009 GDF1108-021 GDF2124-009 GDF2128-021 GDF2128-21 HDF1108-009 HDF2128-009
description	indicator light ø 14mm green 220V connection male faston 4.8mm plastic		

1

No.	360621	**Ref. No.**	1.03.00020017 GDF1104-008 GDF1108-009 GDF2124-008 GDF2128-009 GDF2128-9 HDF1108-008 HDF2128-008
description	indicator light ø 14mm yellow 220V connection male faston 4.8mm plastic		

MAG-PRO

relays

power relays

with bracket mounting

1

No.	381252	Ref. No.	1.03.00010026 GDF1108-003 GDF1108-3 GDF2128-003 HDF1108-021 HDF2128-021
description	relay OMRON 230VAC 25A 2NO connection male faston 6.3mm bracket mounting at 250V 25A manuf. no. G7L-2A-TUB 230VAC		

electronics

PCBs

1

No.	403947	Ref. No.	1.02.HLC300513000
description	PCB for vegetable slicer L 82mm W 82mm		

motors

motors

for vegetable slicers

1

No.	601855	Ref. No.	1.04.05001406100-1
description	motor 230V 550W 50Hz 1400rpm 1 phase shaft ø 31.5mm shaft length 37mm H 220mm mounting distance 170mm		

equipment-specific units

for vegetable slicers

ejector discs

1

No.	699135	Ref. No.	3.HLC300087040301
description	ejector disc high H 30mm ø 200mm seat ø 20mm hole distance 41mm		

grating discs

1

No.	699633	Ref. No.	2,0000001
description	grating disc type H3 ø 205mm seat ø 19mm H 33mm slicing thickness 3mm		

1

No.	699634	Ref. No.	2,0000021
description	grating disc type H4 ø 205mm seat ø 19mm H 33mm slicing thickness 4mm		

cutting discs

blades smooth

cutting discs

1

No.	699631	Ref. No.	2,0000004
description	slicing disk type P2 ø 205mm seat ø 19mm slicing thickness 2mm plastic		

1

No.	699632	**Ref. No.**	2,0000002
description	slicing disk type P4 ø 205mm seat ø 19mm slicing thickness 4mm plastic		

plungers

1

No.	696868	**Ref. No.**	3.HLC300A081060201
description	plunger ø 50mm L 130mm total length 275mm plastic		

spindles

1

No.	692921	**Ref. No.**	2.HLC300045000
description	spindle L1 37mm L2 88mm D1 ø 19mm D2 ø 14mm for vegetable slicer total length 128mm		

miscellaneous

1

No.	692924	**Ref. No.**	2.HLC300-092120340
description	spacer bush ED ø 20mm ID ø 15.5mm H 27mm for vegetable slicer		

1

No.	692925	**Ref. No.**	2.HLC300-060100410
description	threaded bush ED ø M16mm ID ø M10mm H 285mm for vegetable slicer		

for deep fryers

fasteners

1

No.	692544	**Ref. No.**	2.02HDF4260701 GDF2124-034 GDF2124-34 GDF2128-025 HDF2128-023
description	mounting strap L 63mm W 25mm H 15mm		

lids

1

No.	698544	**Ref. No.**	3.CP0603070100 GDF1104-032 GDF1108-039 GDF2124-032 GDF2128-040 GDF2128-40 HDF1108-035 HDF2128-036
description	mushroom cap handle handle ø 50mm ø 70mm L 36mm plastic black		

miscellaneous

1

No.	694738	**Ref. No.**	HDF1108-030 HDF1108-30 HDF2128-031
description	bezel plate L 45mm H 1mm ID ø 30mm		

1

No.	694737	**Ref. No.**	2.02HDF8A130001 GDF1108-032 GDF1108-32 GDF2128-033
description	bezel plate L 63mm H 15mm ID ø 26mm		

MAG-PRO

1

No.	699212	**Ref. No.**	2.HDF8A460201 GDF2128-020
description	pipe stainless steel L 30mm W 13mm thread M5		

for tilting bratt pans

miscellaneous

1

No.	523510	**Ref. No.**	4.01.6202GBT294166
description	deep-groove ball bearing type 6202-2RS shaft ø 15mm ED ø 35mm W 11mm with sealing discs deep-groove ball bearing DIN 625-1		

knobs

universal knobs

1

No.	112733	**Ref. No.**	3.ZCK165BT19010101MGB GDF1104-020 GDF1108-007 GDF2124-020 GDF2124-20 GDF2128-007 HDF1108-020 HDF2128-020
description	knob zero mark t.max.°C ø 55mm shaft ø 6x4.6mm shaft flat upper black		

accessories

rosettes

1

No.	111806	**Ref. No.**	3.ZCK165BT20010101-1 GDF1104-019 GDF1108-006 GDF2124-019 GDF2128-006 GDF2128-6 HDF1108-019 HDF2128-019
description	rosette knob ø 16mm ø 55mm		

handles and hand wheels

cylindrical handles

fixed

1

No.	692918	**Ref. No.**	3.HLC30000511A070100
description	cylindrical handle thread M10 ø 30mm L 97mm plastic for vegetable slicer		

star handles

1

No.	692919	**Ref. No.**	3.HBS3000095070100
description	star handle thread M8 ø 40mm L 32mm black for vegetable slicer		

miscellaneous

1

No.	692545	**Ref. No.**	3.HDF409010101 GDF1104-025 GDF1104-25 GDF2124-025
description	handle L 96mm W 64mm hole distance 73mm mounting pos. side panel black		

MAG-PRO

fittings for catering equipment

outlet taps

producer-specific

HUALING

1

No.	698543	**Ref. No.**	3,0000403 GDF1108-033 GDF2128-034 HDF1108-037 HDF1108-37 HDF2128-038
description	gasket external hight 4mm ED ø 25mm ID ø 16mm		

2

No.	694739	**Ref. No.**	2,000000012 GDF1108-034 GDF2128-035 GDF2128-35 HDF1108-031 HDF2128-032
description	outlet tap chrome-plated steel L 58mm W 48mm H 88mm thread 3/4" IT mounting pos. front		
accessories for	694739		

No.	694737	Ref. No.	2.02HD-F8A130001 GDF1108-032 GDF1108-32 GDF2128-033
bezel plate L 63mm H 15mm ID ø 26mm			

No.	694738	Ref. No.	HDF1108-030 HDF1108-30 HDF2128-031
bezel plate L 45mm H 1mm ID ø 30mm			

No.	698543	Ref. No.	3,0000403 GDF1108-033 GDF2128-034 HDF1108-037 HDF1108-37 HDF2128-038
gasket external hight 4mm ED ø 25mm ID ø 16mm			

equipment feet and end caps

bolting feet

1

No.	698546	**Ref. No.**	3,0000161 GDF1104-026 GDF1108-025 GDF2124-026 GDF2128-026 GDF2128-26 HDF1108-023 HDF2128-024
description	equipment foot ø 29mm H 16mm rubber bore ø 6mm Qty 1 pcs		

baskets

fryer baskets

HUALING

1

No.	970867	**Ref. No.**	2.HDF403069510 GDF1104-030 GDF1104-30 GDF2124-029
description	fryer basket W1 160mm L1 220mm H1 130mm size 4 litre		
accessories for	970867		

No.	694736	Ref. No.	
handle L 143mm W 41mm H 22mm plastic			

No.	694782	Ref. No.	
handle for fryer basket			

No.	694783	Ref. No.	HDF1108-038 HDF2128-039
handle for fryer basket			

MAG-PRO

1

No.	970866	**Ref. No.**	2.HDF800304 GDF1108-036 GDF2128-037 GDF2128-37
description	fryer basket W1 190mm L1 240mm H1 140mm without handle size 8 litre		
accessories for	970866		

No.	694736	Ref. No.	
handle L 143mm W 41mm H 22mm plastic			

1

No.	970868	**Ref. No.**	HDF1108-033 HDF1108-33 HDF2128-034
description	fryer basket W1 200mm L1 250mm H1 140mm hinged handle size 8 litre		
accessories for	970868		

No.	694736	Ref. No.	
handle L 143mm W 41mm H 22mm plastic			

No.	694782	Ref. No.	
handle for fryer basket			

No.	694783	Ref. No.	HDF1108-038 HDF2128-039
handle for fryer basket			

1

No.	694782	**Ref. No.**	2.HDF812030609510 GDF1104-033 GDF2124-033
description	handle for fryer basket		

1

No.	694783	**Ref. No.**	HDF1108-038 HDF2128-039
description	handle for fryer basket		

1

No.	694736	**Ref. No.**	3.HDF818050101 GDF1104-029 GDF1104-29 GDF1108-037 GDF2124-030 GDF2128-038
description	handle L 143mm W 41mm H 22mm plastic		
accessories for	694736		

No.	560270	Ref. No.	—
raised countersunk head screw thread M5 thread L 12mm SS DIN 966/ISO 7047 Qty 20 pcs intake slotted sunk head			

crumb screens

1

No.	970869	**Ref. No.**	2.HDF405069510 GDF1104-028 GDF2124-028 GDF2124-28
description	crumb screen L 220mm W 160mm H 35mm 4 litre		

1

No.	970870	**Ref. No.**	2.HDF812020609510 GDF1108-035 GDF2128-036 HDF1108-032 HDF1108-32 HDF2128-033
description	crumb screen L 245mm W 200mm H 35mm 8 litre		

MAG-PRO

gaskets

shaft gaskets

shaft gaskets

1

No.	692922	**Ref. No.**	4.01.FB1535721
description	shaft seal ID ø 15mm ED ø 35mm for vegetable slicer H 15mm		

special gaskets

miscellaneous

1

No.	698545	**Ref. No.**	3,0000404 GDF1108-027 GDF1108-27 GDF2128-028 HDF1108-036 HDF2128-037
description	gasket ED ø 31mm ID ø 21mm		

1

No.	698543	**Ref. No.**	3,0000403 GDF1108-033 GDF2128-034 HDF1108-037 HDF1108-37 HDF2128-038
description	gasket external hight 4mm ED ø 25mm ID ø 16mm		

transmission technology and ball bearings

ball bearings

deep-groove ball bearings 2RS

1

No.	523510	**Ref. No.**	4.01.6202GBT294166
description	deep-groove ball bearing type 6202-2RS shaft ø 15mm ED ø 35mm W 11mm with sealing discs deep-groove ball bearing DIN 625-1		

springs

compression springs

1

No.	692920	**Ref. No.**	4.02.00000049
description	compression spring ø 10mm L 18mm wire gauge ø 1mm windings 5.75 for vegetable slicer		

fastening material

fasteners

roll pins

1

No.	692923	**Ref. No.**	4.01.D05035GBT879_512
description	roll pin ø 5mm L 35mm		